Safety nut
SIFA-S | translating screw

Directions of loading
Compressive and tensile

Importantn feature of the ZIMM SIFA.
The SIFA S operates equally in both compressive and tensile directions of loading.

visual SIFA monitoring

electrical SIFA monitoring

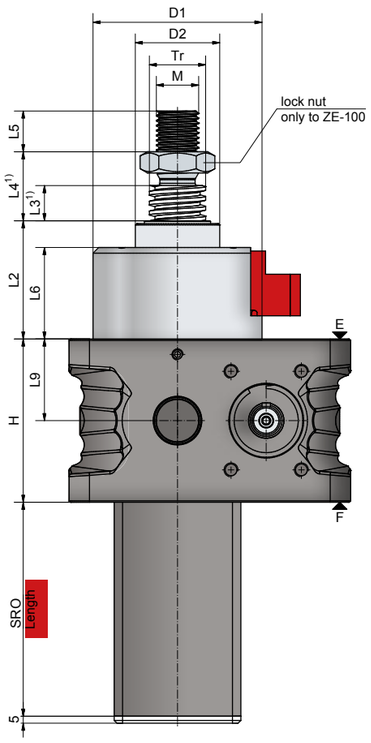

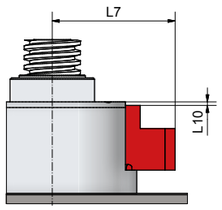

visual SIFA monitoring

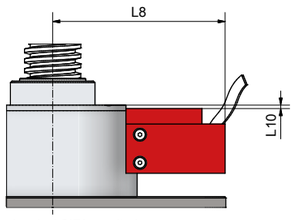

electrical SIFA monitoring

Function:

The load is borne by the worm wheel via the screw.
If the worm wheel screw thread wears through, the SIFA restrains the screw. The load remains supported.

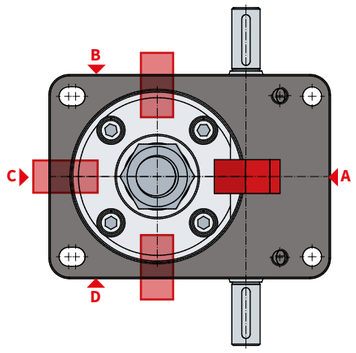

Screw jacks	Stroke per drive resolution		Tr-thread	H	D1	D2	L2	L3 1)	L4 1)	L5	L6	L7	L8	L9	L10	M
	SN	SL														
ZE-10	1	0,25	20x4	74	81	39	74	10	22	20	58	72	108	21	1	M14
ZE-25	1	0,25	30x6	82	92	46	76	10	26	22	59	79	114	25	1	M20
ZE-35	1	0,25	40x7	100	100	60	80	10	34	29	61	82	117	50	1	M30
ZE-50	1	0,25	40x7	116	120	60	84	10	34	29	65	88	123	58	1	M30
ZE-100	1	0,25	55x9	160	135	85	103	20	48	48	73	95	130	80	9	M36
ZE-150	1	0,25	60x9	185	161	90	113	20	20	48	81	107	141	92,5	6	M42x2

1) See technical section on our website for extension if bellows or spiral spring is fitted.

Safety nut
SIFA-S | monitoring

Standard (without any monitoring)

If the version used has no visual or electrical monitoring, the dimension A must be measured and documented when new, then regulary checked and documented frequently.

That way the user can detect the wear by measuring by hand from time to time.

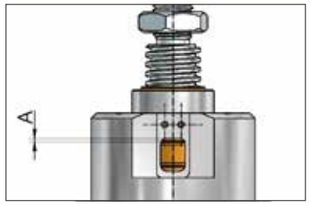

Visual monitoring

Monitoring
Wear should be checked and documented at regular intervals.
This allows the fitting operation for replacement to be planned in good time so as to avoid system downtime.

OK
Wear still <25% of P

CAUTION!
max. permissible wear reached - Replace the gearbox

STOP!
Wear >25% or thread already worn through
Stop operation immediately!

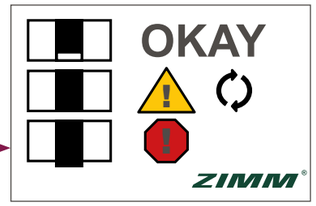

Electrical monitoring

WARNING! Switch S1
At 25% wear the limit switch S1 trips.
The customer must detect this signal.
This enables substitution to be planned well in advance and therefore prevents any unnecessary downtime.

STOP! Switch S2
If after the first signal operation of the jack continues, the nut will continue to wear until the thread is worn through.

When the thread is worn through, the safety nut takes the load.
The limit switch S2 trips.

The customer must detect this signal and stop the system.

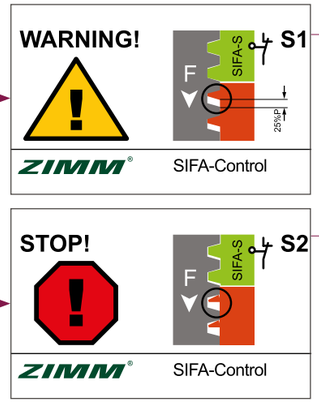

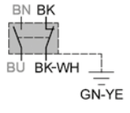

For safety application, use opener only.

Ordering example: Z-35-SN-SIFA-OP-A

Version
SN or SL
Monitoring
NO: without any monitoring
OP: visual
EL: electrical (wear, thread stripping)

worn through
Position
A (standard), B, C or D
(can also subsequently be rotated steplessly through 360°)